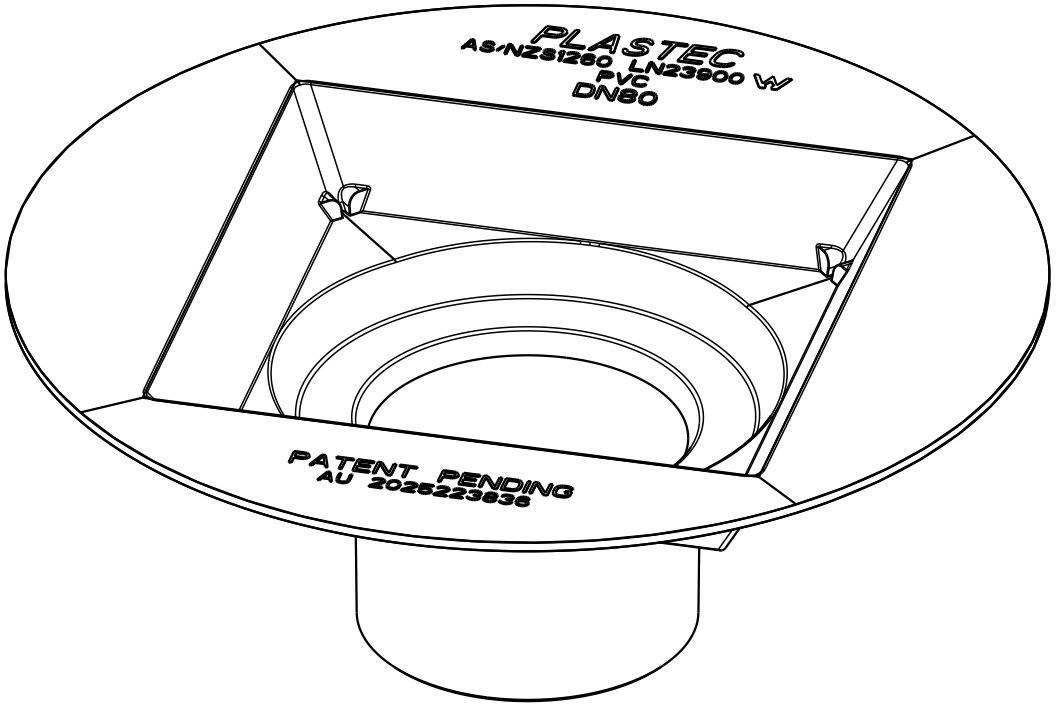

SCALE 0.600

PLASTEC
INNOVATIVE PLUMBING SOLUTIONS
2-4 Enterprise Street
Caloundra QLD 4551 Australia
www.plastec.com.au
Tel: 61 7 5413 4444
Fax: 61 7 5491 8918

21206

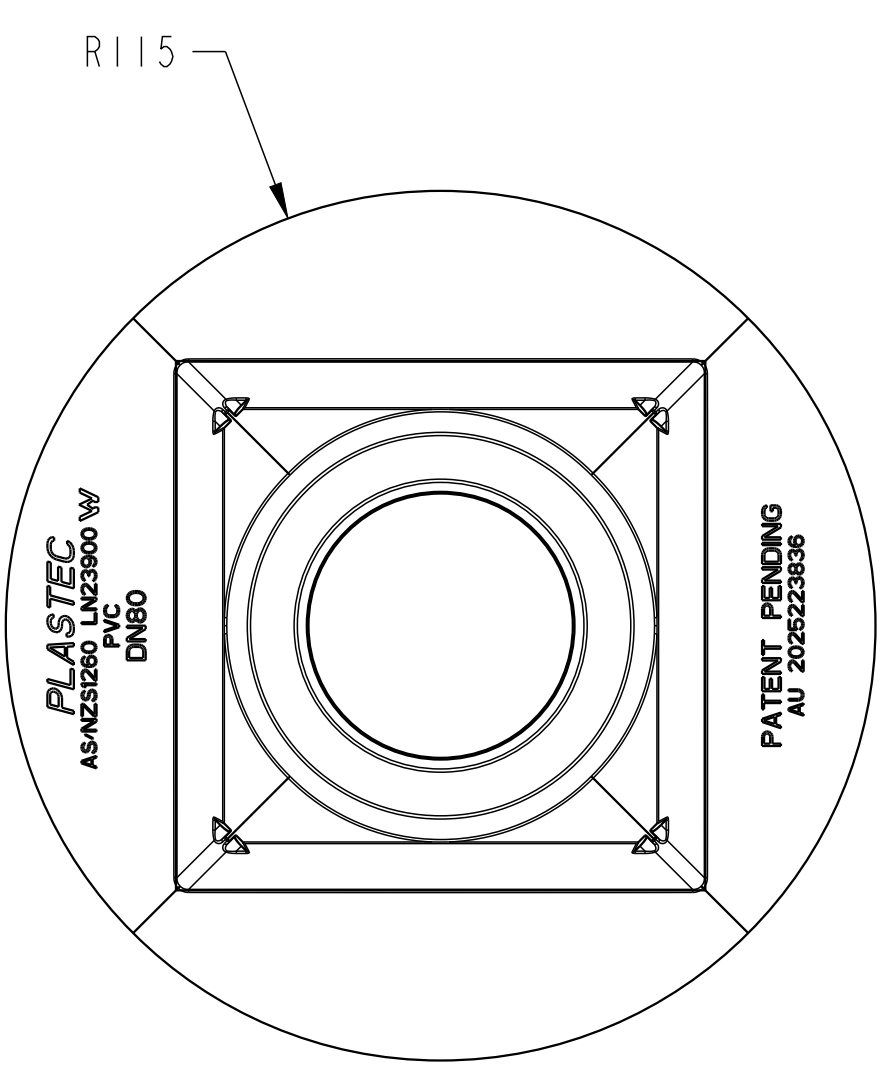

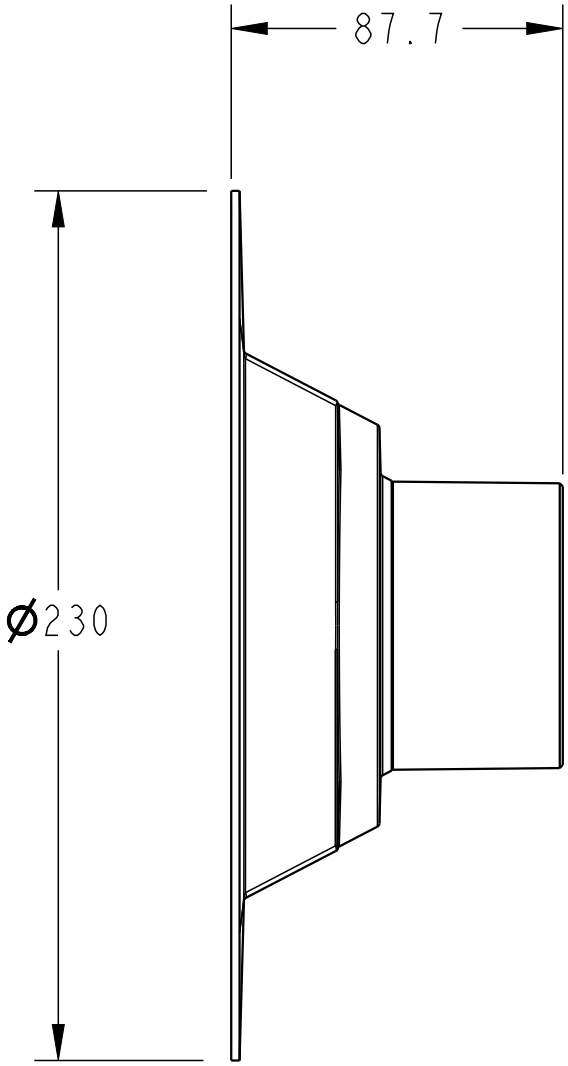

SCALE 0.500

PLASTEC
INNOVATIVE PLUMBING SOLUTIONS
2-4 Enterprise Street
Caloundra QLD 4551 Australia
www.plastec.com.au
Tel: 61 7 5413 4444
Fax: 61 7 5491 8918

21206